N.R. NARONG GROUP

NR TABLET COMPRESSION TOOLING PUNCH & DIE

• COMPUTERIZED MACHINE TOOLS • HIGH QUALITY STEEL
• EXPERT CRAFTSMANSHIP • METICULOUS Q.C.
• QUICK DELIVERY • REASONABLE PRICE

NR TABLET COMPRESSION TOOLING PUNCH & DIE

CAD/CAM Systems are our tools for master design, drawing and create CNC programs to assure accuracy and integrity of designs, also obtain quality and quick delivery of compression tools.

Nowadays high performance tabletting machines require high quality of compression tooling-punches and dies to make high quality tablets with maximum output.

Five-Axis CNC laser engraving machine together with its powerful CAD/CAM provides accuracy, speed and reproducibility of master HOB development process.

Accuracy and shape compatibility of dies are ensured by the high precision EDM wire cutting machine with very precise tolerance.

CNC Lathe is the key to success for high quality and quantity Punches and Dies production.

CNC Profile grinder ensures the tolerance of Punch's tip no matter how complex the shape of the tip is.

State of the Art computerized controlled Vacuum Furnace ensures the quality of heat treatment done on our Punches and Dies.

Quality Control routines have been carried out throughout our manufacturing process, final QC report of critical dimensions is accompanying the delivery of our Punches and Dies for GMP protocol.

Final polishing was done by Nano -particle diamond.

B TYPE

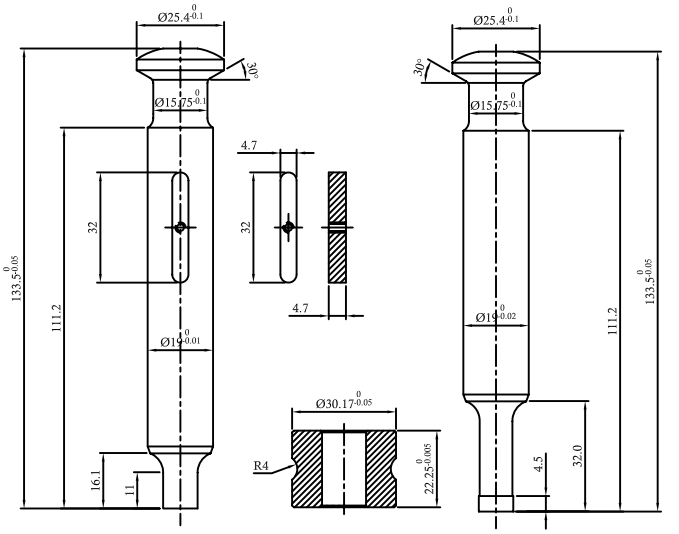

UPPER PUNCH DIE LOWER PUNCH

D TYPE

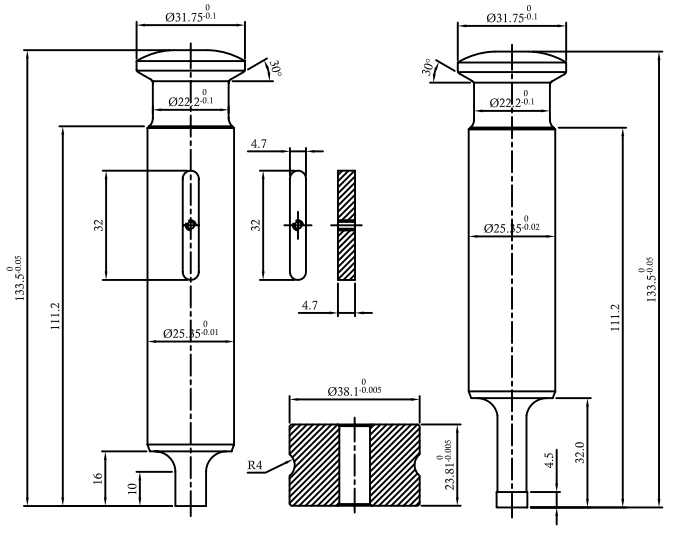

UPPER PUNCH DIE LOWER PUNCH

EURO-B

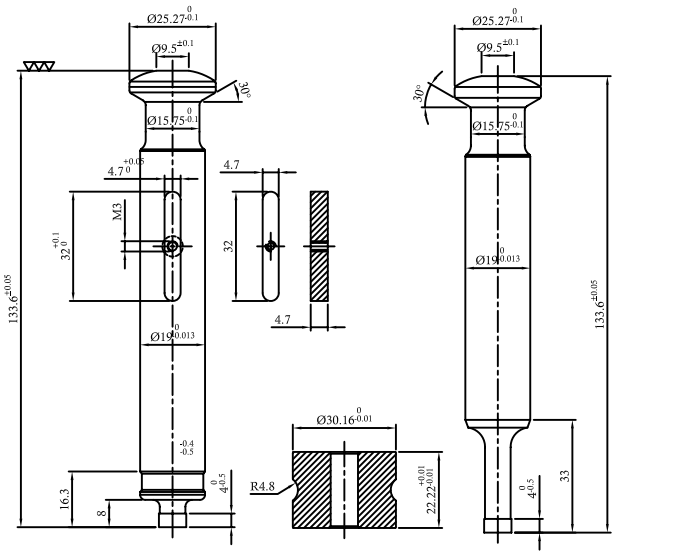

UPPER PUNCH DIE LOWER PUNCH

EURO-D

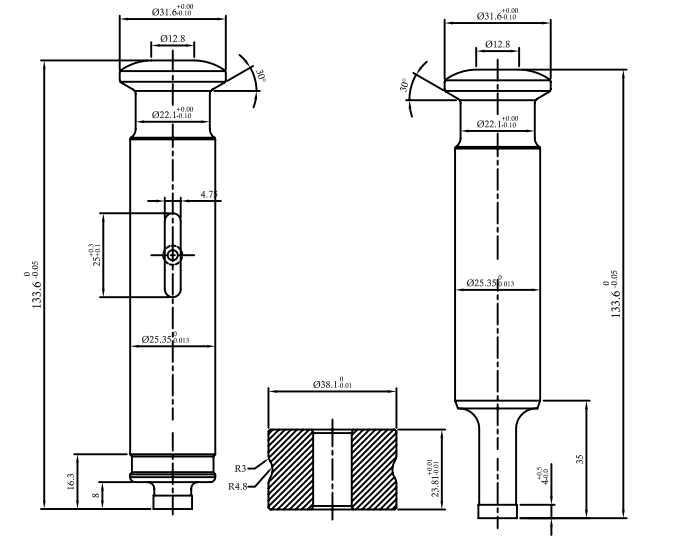

UPPER PUNCH DIE LOWER PUNCH

NRU

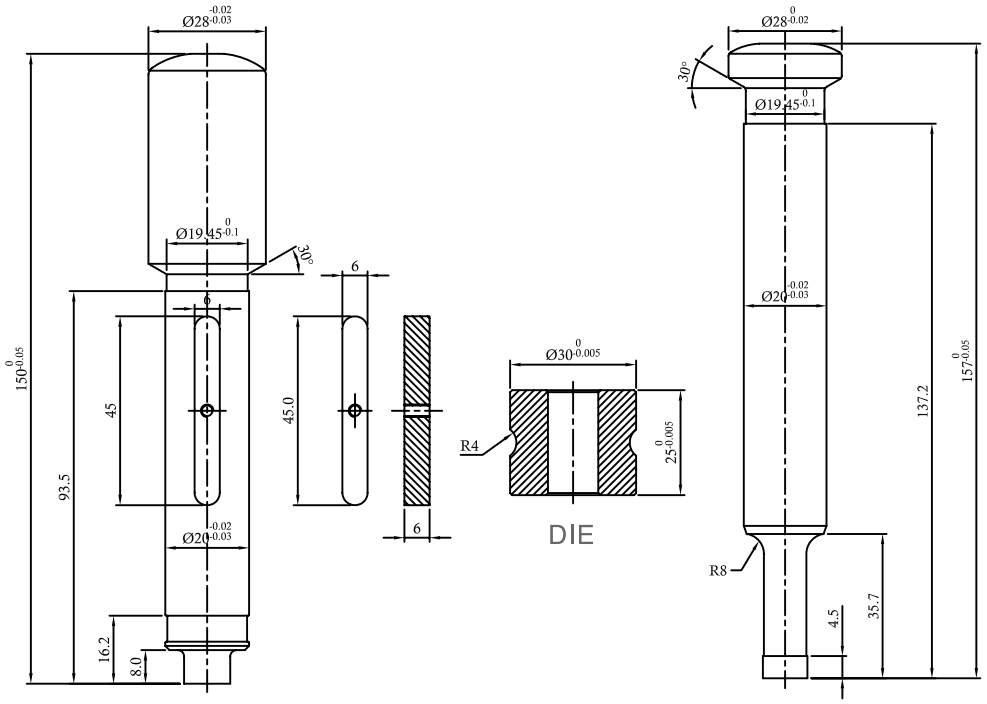

UPPER PUNCH DIE LOWER PUNCH

RELATIONSHIP OF MAXIMUM FORCE AND PUNCH TIP

TABLET PUNCHES, MAXIMUM FORCH GUIDE

PUNCH TIP DIA.		MAXIMUM FORCE IN TONS & KILOGRAMS NORMAL CONCAVE,SHALLOW CONCAVE AND FLAT		FLAT BEVELLED EDGE AND DEEP CONCAVE	
INCHES	MM	TONS	KGS	TONS	KGS
1/8	3.0	0.50	500	0.25	250
-	3.5	0.50	500	0.25	250
5/32	4.0	0.75	750	0.50	500
-	4.5	0.75	750	0.50	500
3/16	5.0	1.00	1,000	0.75	1,000
7/32	5.5	1.50	1,500	1.00	750
-	6.0	1.75	1,750	1.00	1,000
1/4	6.5	2.00	2,000	1.25	1,250
9/32	7.0	3.00	3,000	1.50	1,500
-	7.5	3.25	3,250	1.50	1,500
5/16	8.0	3.75	3,750	1.75	1,750
11/32	8.5	4.75	4,750	2.00	2,000
-	9.0	5.00	5,000	2.00	2,000
3/8	9.5	5.50	5,500	2.25	2,250
-	10.0	6.00	6,000	2.25	2,250
13/32	10.5	6.50	6,500	2.50	2,500
7/16	11.0	7.75	7,750	3.00	3,000
-	11.5	8.25	8,210	3.25	3,250
15/32	12.0	8.75	8,750	3.50	3,500
1/2	12.5	10.00	10.000	4.00	4,000
9/16	14.0	12.75	12.750	5.25	5,250
11/16	17.5	18.50	18,500	7.50	7,500
3/4	19.0	22.00	22,000	8.75	8,750
7/8	22.0	30.00	30,000	12.00	12,000
1	25.5	35.00	35,000	14.00	14,000

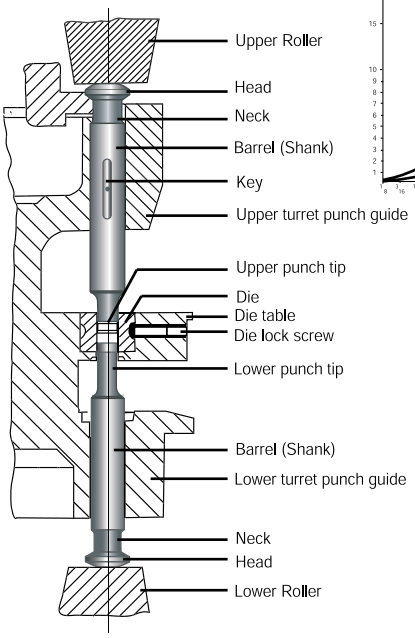

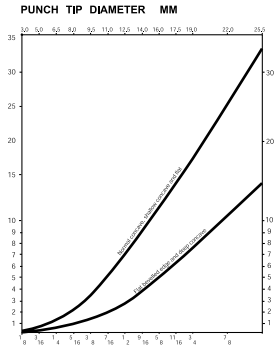

CLEARANCE OF PUNCH AND DIE

METRIC PUNCH & DIE CLEARANCE AND TOLERANCE

NOMINAL DIE SIZE	UPPER PUNCH SIZES HIGH - LOW	LOWER PUNCH SIZE HIGH - LOW
3.0	2,967 - 2,957	2,979 - 2,970
3.5	3,467 - 3,457	3,480 - 3,470
4.0	3,965 - 3,955	3,978 - 3,968
4.5	4,465 - 4,456	4,480 - 4,471
5.0	4,963 - 4,953	4,978 - 4,969
5.5	5,463 - 5,454	5,479 - 5,469
6.0	5,959 - 5,949	5,977 - 5,966
6.5	6,459 - 6,449	6,477 - 6,467
7.0	6,957 - 6,947	6,977 - 6,968
7.5	7,455 - 7,445	7,478 - 7,468
8.0	7,955 - 7,946	7,976 - 7,966
8.5	8,448 - 8,438	8,473 - 8,464
9.0	8,948 - 8,939	8,947 - 8,964
9.5	9,449 - 9,439	9,474 - 9,464
10.0	9,947 - 9,937	9,975 - 9,965
10.5	10,444 - 10,435	10,472 - 10,463
11.0	10,942 - 10,933	10,970 - 10,960
11.5	11,440 - 11,430	11,471 - 11,461
12.0	11,940 - 11,931	11,971 - 11,961
12.5	12,441 - 12,431	12,471 - 12,462
13.0	12,936 - 12,926	12,969 - 12,959
13.5	13,434 - 13,424	13,467 - 13,457
14.0	13,937 - 13,927	13,970 - 13,960
14.5	14,435 - 14,425	14,470 - 14,461
15.0	14,933 - 14,923	14,968 - 14,958
16.0	15,931 - 15,921	15,966 - 15,957
17.0	16,929 - 16,919	16,967 - 16,957
17.5	17,492 - 17,420	17,468 -17,458
18.0	17,925 - 17,915	17,965 - 17,956
19.0	18,923 - 18,913	18,964 - 18,954
20.0	19,919 - 19,909	19,962 - 19,952
21.0	20,917 - 20,907	20,963 - 20,953
22.0	21,913 - 21,902	21,958 - 21,949
23.0	22,911 - 22,901	22,959 - 22,949
24.0	23,906 - 23,897	23,957 - 23,948
25.0	24,917 - 24,895	24,968 - 24,946

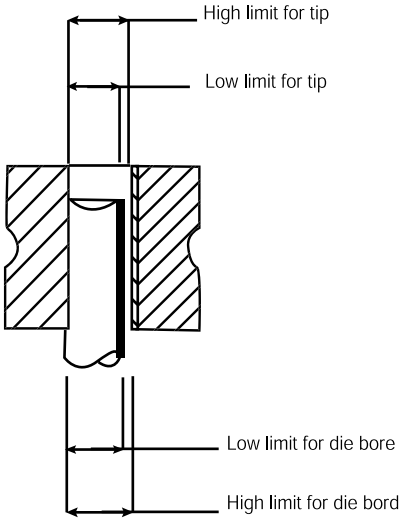

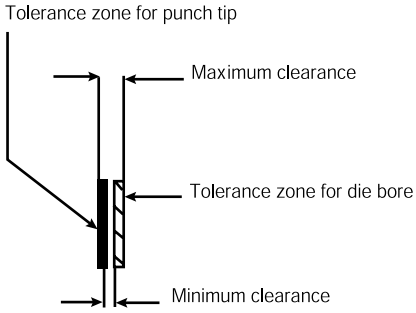

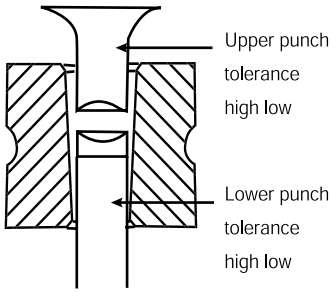

STANDARD AND PROPERTIES OF PUNCH AND DIE MATERIALS

PHARMACEUTICAL TABLET COMPRESSION TOOLING

AISI DESIGNATION

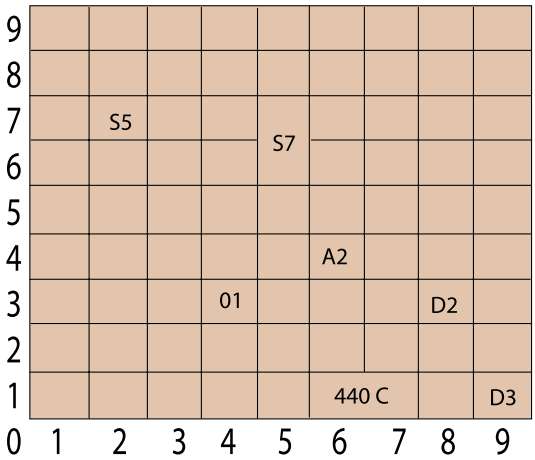

WEAR RESISTANCE INCREASE

Properties of Steel with Various Alloying Elements

Properties \ Elements	Carbon	Carbide Forming Elements				Non-Carbide-Forming Elements		
		Chrome	Molyb-denum	Vana-dium	Tung-sten	Nickel	Cobalf	Manga nese
Hardenabllity	(+)	+ +	+	+	+	+	-	+
Wear Resistance	+ + +	+ +	+ +	+ + +	+ +	0	0	0
Toughness	- - -	(-)	-	-	-	+ +	-	+
Red Hardness or Hot Tensllle Strength	+	+	+ +	+	+	+	-	0
Retention of Tempering	(+)	+	+ +	+ +	+ +	+	0	0
Dimensional Stabllity	0	+	+	+	+	+	0	+

+ + + increasing
- - - decresing
0 neutral
() no Important effect

COMPARABLE STANDARDS

AISI	DIN
S5	
S7	
A2	1.2363
01	1.2510
D2	1.2379
D3	1.2080
440C	1.4125

HARDNESS CONVERSION TABLE

HARDNESS		
Vlckers HV	Rockwell C HRC	Brinell HB
600	54.4	564
610	54.9	573
620	55.4	582
630	55.9	591
640	56.4	601
650	56.9	611
660	57.4	620
670	57.9	630
690	58.9	647
700	59.3	
710	59.8	
720	60.2	
730	60.7	
740	61.1	
750	61.5	
760	61.9	
770	62.3	
780	62.6	
790	63.1	
800	63.5	
810	63.9	
820	64.3	
830	64.7	
840	65.0	
850	65.4	
860	65.7	
870	66.0	
880	66.3	
890	66.6	
900	66.9	
910	67.2	

STANDARD DEPTH OF PUNCH TIP

CONCAVE PUNCH TIP TABULATION

DIAMETER		SHALLOW CONCAVE		NORMAL CONCAVE		DEEP CONCAVE	
METRIC	IMPERIAL EQUIVALENT	RADIUS	DEPTH	RADIUS	DEPTH	RADIUS	DEPTH
4.0	5/32	7.5	0.27	6.0	0.34	3.5	0.63
4.5	-	8.0	0.32	6.0	0.44	3.5	0.82
5.0	3/16	8.5	0.38	6.0	0.55	3.5	1.05
5.5	7/32	9.5	0.14	6.5	0.61	4.0	1.10
6.0	-	10.0	0.46	7.0	0.68	4.0	1.35
6.5	1/4	11.0	0.49	8.0	0.69	4.5	1.39
7.0	9/32	12.0	0.52	8.5	0.75	5.0	1.43
9.0	-	15.5	0.67	11.0	0.96	6.5	1.81
9.5	3/8	16.0	0.72	11.5	1.03	6.5	2.06
10.0	-	17.0	0.75	12.0	1.09	7.0	2.10
10.5	13/32	18.0	0.78	12.5	1.16	7.5	2.14
11.0	7/16	19.0	0.81	13.0	1.22	7.5	2.40
11.5	-	19.5	0.87	14.0	1.24	7.5	2.68
12.0	15/32	20.5	0.90	14.5	1.30	8.0	2.71
12.5	1/2	21.0	0.95	15.0	1.36	8.0	3.01
13.0	-	22.0	0.98	16.0	1.38	8.5	3.02
13.5	-	23.0	1.01	16.0	1.49	8.5	3.33
14.0	9/16	24.0	1.04	17.0	1.51	9.5	3.08
14.5	-	24.0	1.12	17.0	1.62	9.5	3.36
15.0	-	25.0	1.15	18.0	1.64	10.0	3.39
15.5	-	26.0	1.18	18.0	1.75	10.0	3.68
16.0	5/8	27.0	1.21	19.0	1.77	11.0	3.45
16.5	-	28.0	1.24	20.0	1.78	11.5	3.49
17.0	-	29.0	1.27	20.5	1.85	12.0	3.53
17.5	11/ 16	30.0	1.30	21.0	1.91	12.0	3.79
18.0	-	30.5	1.36	21.5	1.97	12.5	3.83
18.5	-	31.5	1.39	22.0	2.04	13.0	3.87
19.0	3/4	32.5	1.42	23.0	2.05	13.5	3.91
19.5	-	33.0	1.47	23.5	2.12	13.5	4.16
20.0	-	34.0	1.50	24.0	2.18	14.0	4.20
20.5	13/16	35.0	1.53	24.5	2.25	14.5	4.24
21.0	-	35.0	1.59	25.0	2.31	14.5	4.50
21.5	-	36.5	1.62	26.0	2.33	15.0	4.54
22.0	-	37.5	1.65	26.5	2.39	15.5	4.58
22.5	7/8	38.0	1.70	27.0	2.46	15.5	4.84
23.0	-	39.0	1.73	27.5	2.52	16.0	4.88
23.5	-	40.0	1.76	28.0	2.58	16.5	4.92
24.0	15/16	41.0	1.80	29.0	2.60	17.0	4.96
24.5	-	41.5	1.85	29.5	2.66	17.0	5.21
25.0	-	42.5	1.88	30.0	2.73	17.5	5.25
25.5	1	43.5	1.91	30.5	2.79	18.0	5.29

N.R. NARONG GROUP

768 M.3 Soi. Thanpuying Teparuk Rd. Muang Samutprakan 10270 THAILAND
768 ม.3 ซ. ท่านผู้หญิง ถ.เทพารักษ์ อ. เมือง สมุทรปราการ 10270
T. (662) 758-1492-9, (662) 758-1488-90
Fax. (662)384-1945
www.nr-group.com
info@nr-group.com